**Analysis and Design of the Selected Amplifier - Gain, Input Resistance, Biasing, and Design Approximations:**

Equivalent circuit of CE BJT amplifier with Voltage Divider bias:

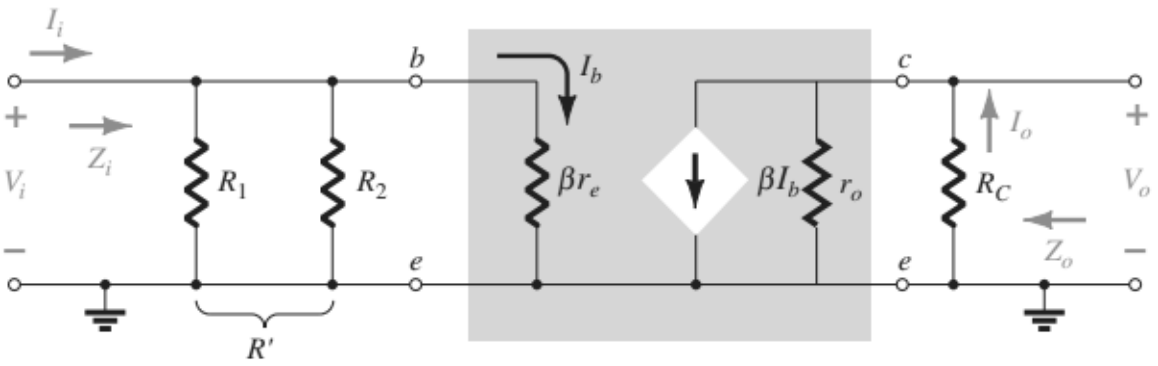


Here,

Voltage gain, $|Av| = \frac{Vo}{Vi} = \frac{Rc \,||\, RL}{re}$

Input Resistance, $Ri = R1 \,||\, R2 \,||\, \beta r_e$

Let,

$\beta = 100$

$R_L = 10k\Omega$

$R_C = 13k\Omega$

Then,

$|A_V| = \frac{13k\Omega \,||\, 10k\Omega}{re} = 30$

=> $r_e = 188.4\Omega$

Again,

$r_e = \frac{26mV}{Ie}$

=> $I_E = 0.138mA$

∴ $\beta r_e = 18.84k\Omega$

And,

$$I_E = I_B + I_C$$

But, $I_C = \beta I_B$ (approximately)

=> $I_E = (\beta + 1) . I_B$

=> $I_B = 1.36\mu A$

And, $I_C = \beta I_B = 100(1.36\mu A) = 0.136$ mA

Again,

$$V_E = I_E R_E$$

$$V_C = V_{CC} - I_C R_C$$

$\therefore$ $V_{CE} = V_C - V_E = V_{CC} - I_C R_C - I_E R_E$

Assuming $V_{CE} = V_{CC}/2 = 5V$,

$$R_E = \frac{|Vce - Vcc + IcRc|}{Ie} = 23.42k\Omega$$

Again,

$$V_{BE} = V_B - V_E$$

=> $V_B = 0.7 = I_E R_E = 3.93V$

The current through R1 and R2 should be approximately 10x the Base current.

$\therefore$ $I_{R1} = 13.6uA = I_{R2}$

And, $V_{R2} = V_B$

$\therefore$ $R2 = \frac{Vr2}{Ir2} = \frac{Vb}{Ir2} = 291k\Omega$

Again,

$$V_B = \frac{R2}{R1 + R2} \cdot Vcc$$

=> R1 + R2 = 740kΩ

=> R1 = 449kΩ

∴ Ri = R1 || R2 || $\beta r_e$ = 17.02kΩ, which is greater than 17.5Ω as required.

Let, the lower cutoff frequency is $f_L$ = 10Hz. Then,

Input Coupling Capacitance, C1 = $\frac{1}{2\pi f LRi}$ ≈ 1μF.

Output Coupling Capacitance, C2 = $\frac{1}{2\pi f LRi}$ ≈ 1μF.

Assuming the Emitter Bypass Capacitor, $C_E$ = 47μF

Finally,

**R1** = 449kΩ

**R2** = 291kΩ

**Rc** = 13kΩ

**Re** = 23.42kΩ

**C1** = 1μF

**C2** = 1μF

**$C_E$** = 47μF

## Software Implementation:

We constructed the amplifier circuit in PSpice Schematics as follows:

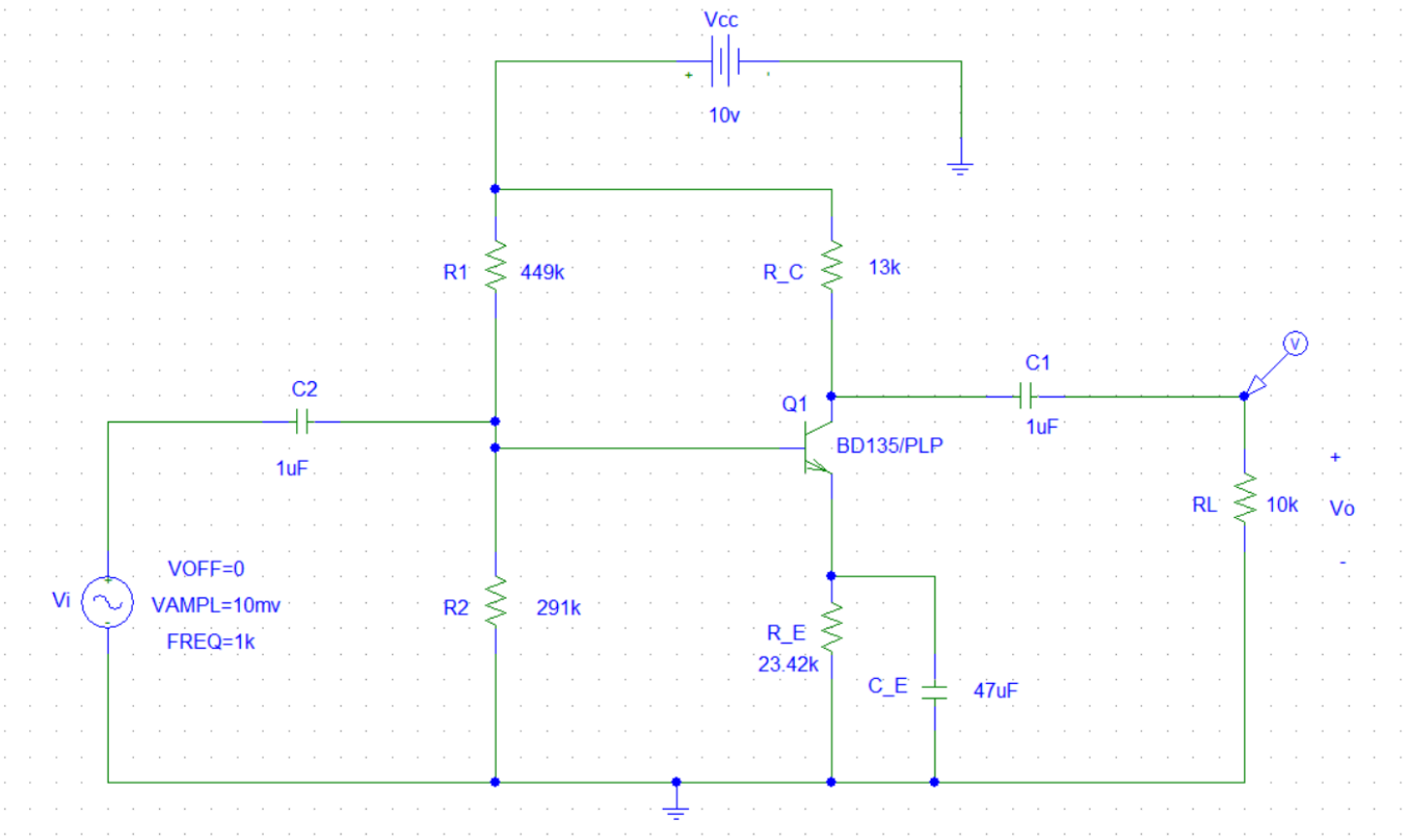


## Transient Analysis Settings:

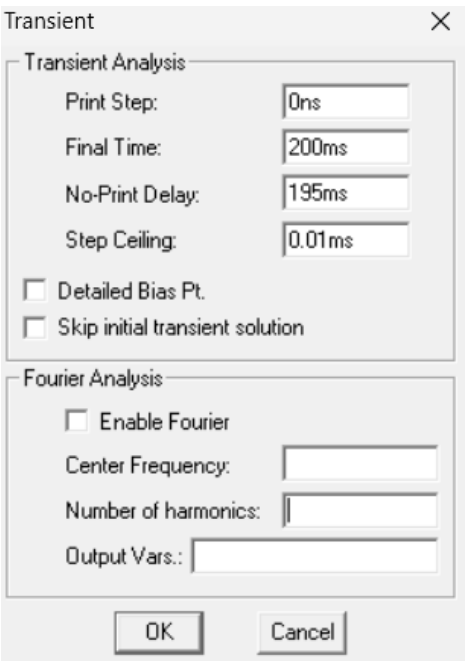

**Graph:**

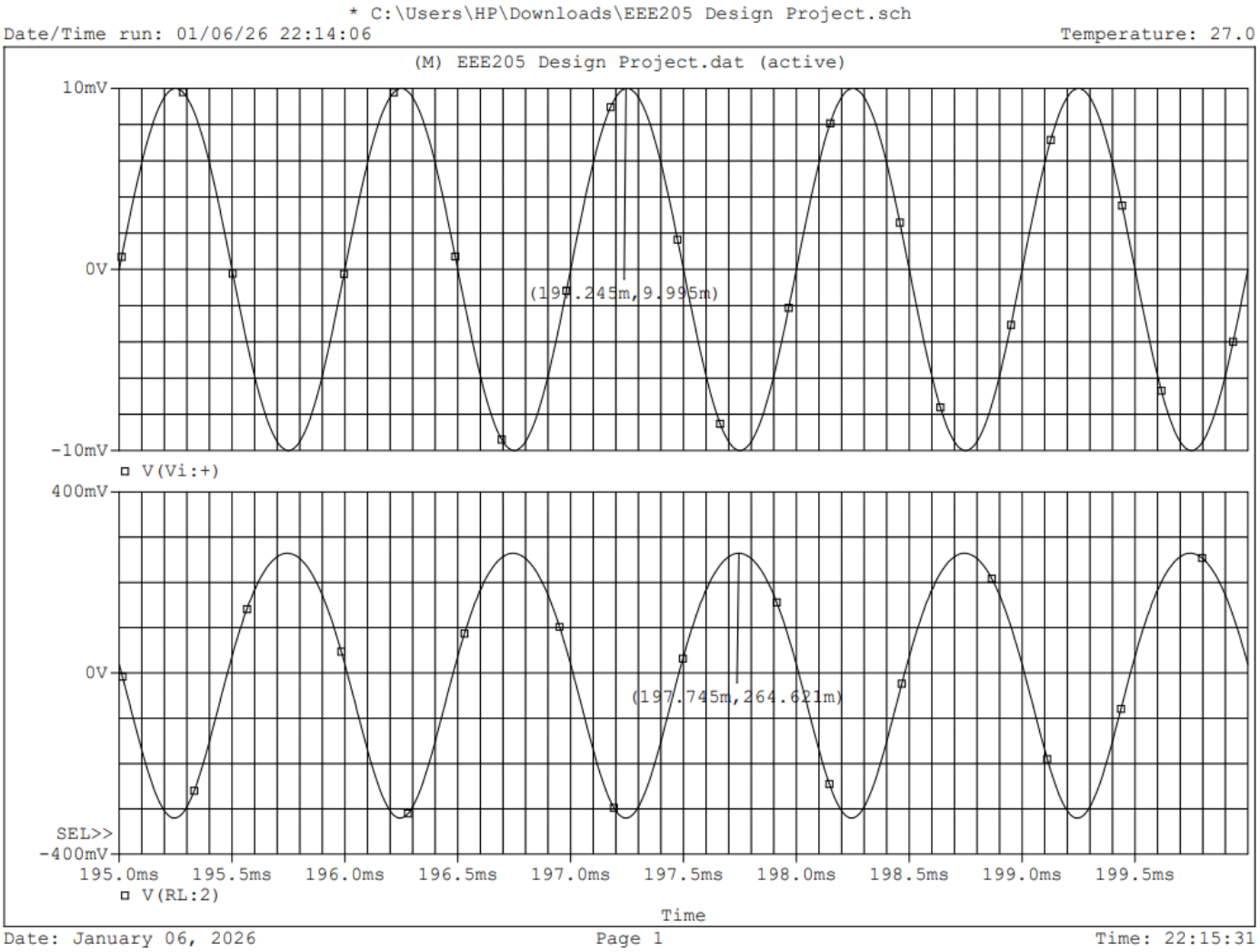


Here, the first plot is the Input Waveform and the second plot is the Output Waveform. It can be observed that at Cursor Peak,

**Vi** = 9.995 mV

**Vo** = 264.621 mV

Hence,

Voltage Gain, |**Av**| = $\frac{Vo}{Vi} = \frac{264.621mV}{9.995mV} = 26.5$

which is very close to the given design parameter.

**Hardware Implementation:**

**Apparatus:**

1. Transistor (C828)
2. Resistors (330kΩ, 220kΩ, 100kΩ, 55kΩ, 18kΩ, 10kΩ, 1kΩ)
3. Capacitors (1μF, 47μF)
4. DC Voltage source (10V)
5. AC Function Generator (100mV, 1 kHz)
6. Oscilloscope

**Setup Picture:**

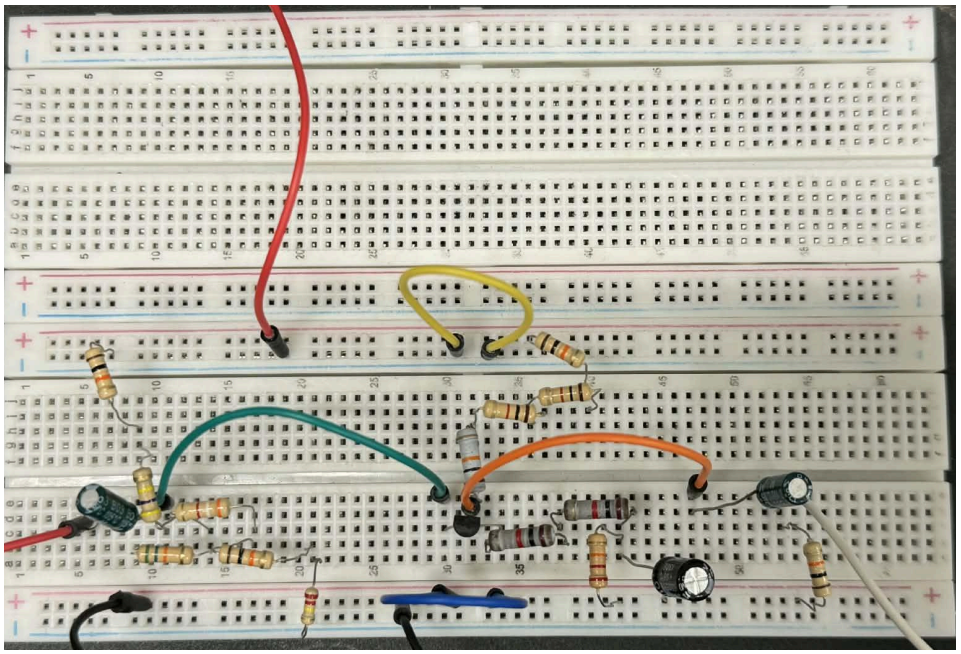

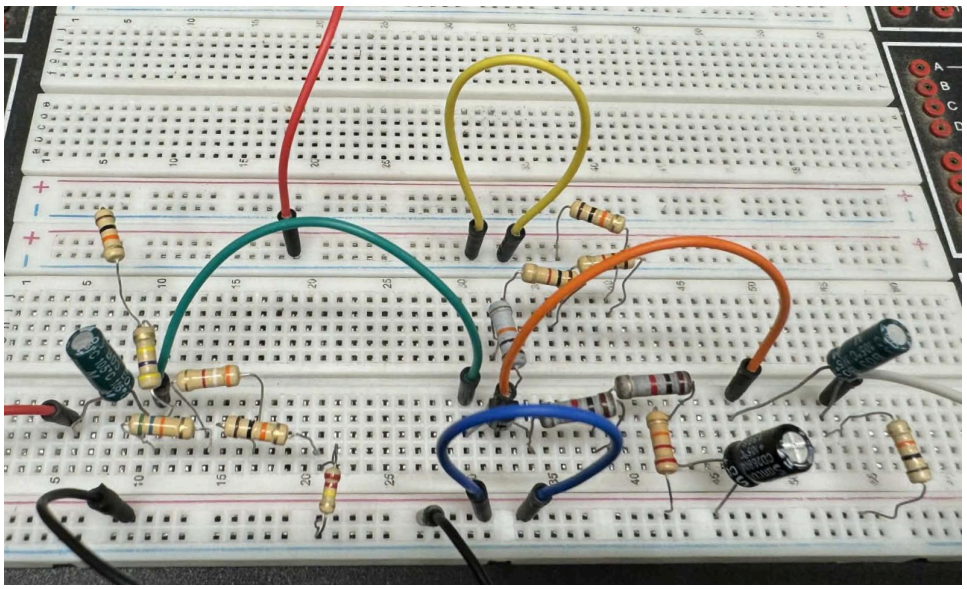

**Graph:**

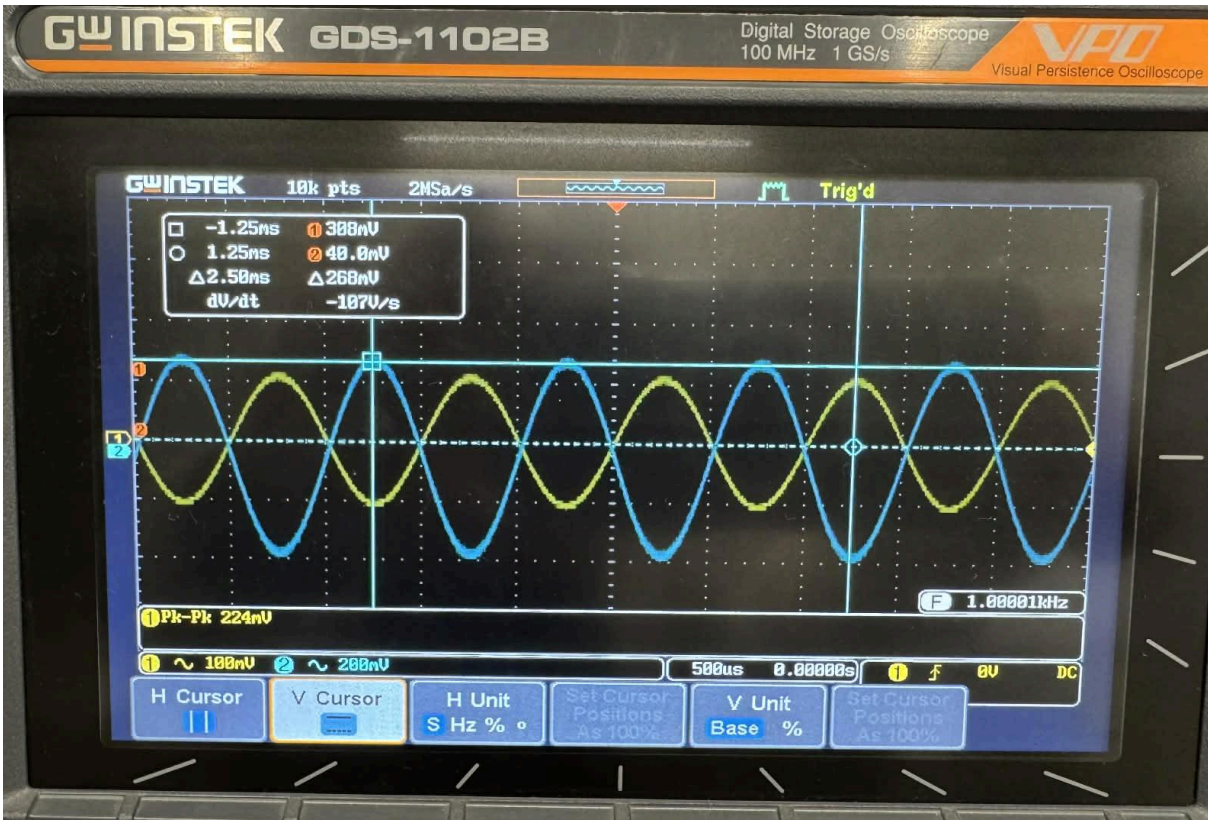


**Fig:** Input and Output Waveform

Here it can be observed that,

**Vi** = 100 mV

**Vo** = 300 mV

Hence,

Voltage Gain, |**Av**| = $\frac{Vo}{Vi} = \frac{300mV}{`100mV} = 3$